HDL-C 直升机平台防爆灯

HDL-C Helideck Explosion-proof Light

IP 66/67/69

应用场所 Application

- 适用于直升机平台“TD/PM”圈的灯光指示；
- 适用于爆炸性环境1区，2区，21区，22区等场所；
- 适用于环境温度：-40℃~+60℃。

- Applied to the lighting indication of “TD/PM” circle for helideck;
- Explosive hazardous atmosphere Zone 1, Zone 2, Zone 21, Zone 22;
- Suitable for temperature of -40℃~+60℃.

产品特性 Features

- 壳体采用优质海工铝，适用于海洋环境；
- LED黄色光源，寿命长达10万小时；
- 可通过控制系统，对灯具发出调光指令，实现灯具标准亮和明亮的切换；
- 专业光学软件设计的二次配光系统，符合CAP437标准要求。

- Enclosure uses high quality maritime aluminium alloy, which is applied to the ocean environment.
- LED yellow light source, service life is up to 100000 hours.
- Standard light and bright light of light fittings can be switched through controlling the system and the dimming instruction of light fittings.
- Professional optics software designed secondary light distribution system, conform to CAP437 standard requirements.

选配表 Selection table

型号 Type	额定电压(V) Rated voltage	额定功率(W) Rated power	发光颜色 Lamp colour	防护等级 Degree of protection	重量(kg) Weight
HDL-C	16V~32V DC	≤4W	黄色 Yellow	IP66/IP67/IP69	3.5

- 如需其他特殊要求，订货时请注明。
- If other special requirements are needed, please specify when ordering.

Supplied By
inatex.
www.inatex.com

技术参数 Technical parameters

执行标准 Conformity to standards		IEC 60079, EN 60079, GB/T 3836, CCS 入级规范 (CCS standard), CAP 437		
防爆标志 Ex-Mark	GB	Ex db eb IIC T6 Gb Ex tb IIIC T80℃ Db		
	IECEx	Ex db eb IIC T6 Gb Ex tb IIIC T80℃ Db IP66/IP67 IECEx TUR 18.0057X		
	ATEX	Ⓔx II 2 G Ex db eb IIC T6 Gb Ⓔx II 2 D Ex tb IIIC T80℃ Db IP66/IP67		
环境温度 Ambient temperature		−40℃~+60℃		
光源类型 Light source		LED		
发光强度 Light intensity	仰角 (Elevation)	0°~10°	>10°~20°	>20°~90°
	光强 (Intensity)Max	60cd	45cd	15cd
防护等级 Degree of protection		IP66/IP67/IP69		
防腐等级 Corrosion-proof		WF2		
进线规格 Cable entry		4 × 1.0mm²		
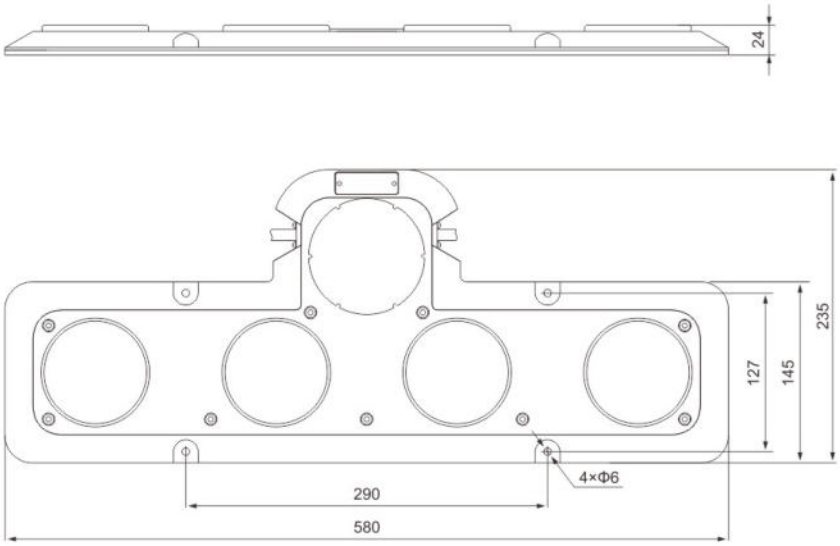
外形尺寸 Outline dimension